Arduino BMI measurement

The Smart BMI Measurement System is a device that automatically measures a person's height, weight, body temperature, and pulse rate, calculates BMI (Body Mass Index), and displays the results on an LCD screen while providing audio feedback as well.

Parameters Measured

- Height – VL53L0X Distance Sensor
- Weight – Load Cell + HX711 Amplifier
- Body Temperature – DS18B20 Sensor with probe
- Pulse Rate – Pulse Sensor
- Output – LCD Display + MP3 Audio Module(Speaker)

Step 1: Components required

1. Microcontroller: Arduino Nano

2. Sensors:
    - VL53L0X Distance Sensor (Height)
    - Load Cells-4
    - HX711 Load Cell Amplifier
    - DS18B20 Temperature Sensor
    - Pulse Sensor

3. Output Devices:
    - 16×2 I2C LCD Display
    - MP3-TF-16P / DFPlayer Mini
    - Speaker(8Ω 0.5W)

4. Additional Components:
    - Push button
    - Breadboard
    - Jumper Wires
    - 4.7kΩ resistor (for DS18B20)
    - 1kΩ resistor (for MP3TF16P)
    - USB cable for programming

Step 2: Hardware connections

Refer the circuit diagram for connections

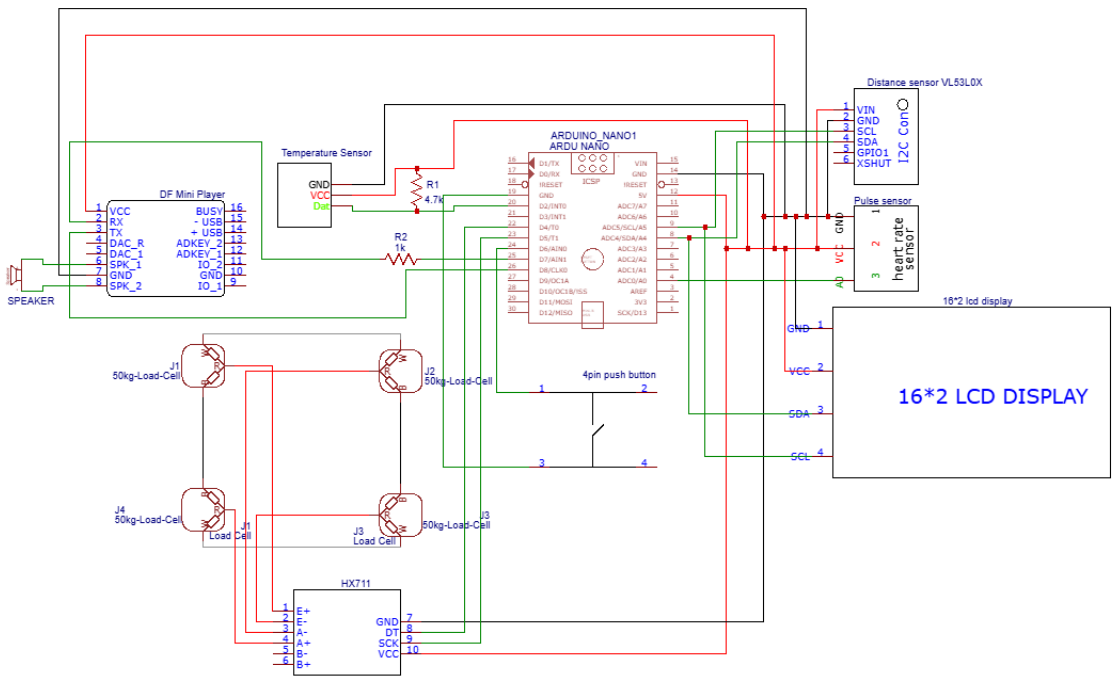

Distance sensor pin connections:

VL53L0X Pin	Arduino Nano
VCC	5V
GND	GND
SDA	A4
SCL	A5

LCD display pin connections:

LCD Pin	Arduino Nano
VCC	5V

GND	GND
SDA	A4
SCL	A5

Temperature sensor DS18B20 pin connections:

DS18B20 Pin	Arduino Nano
VCC	5V
DATA	D2
GND	GND

Note:Add a 4.7kΩ resistor between VCC and DATA.

Pulse sensor pin connections:

Pulse Sensor	Arduino Nano
VCC	5V
GND	GND
SIGNAL	A0

4 Load cell connections:

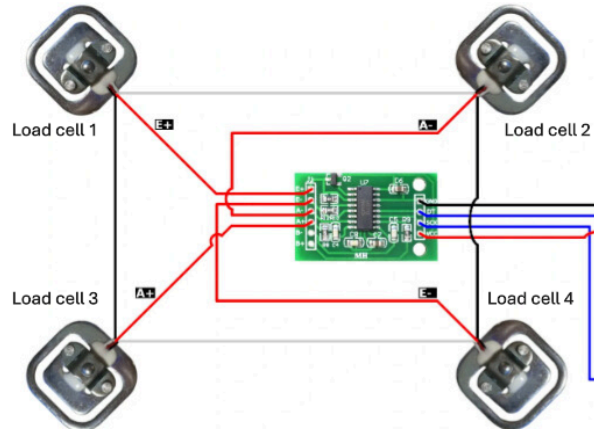

Load Cell	Wire	Connected to
Load cell 1	White Black Red	Load cell 2 white wire Load cell 3 black wire E+ of HX711
Load cell 2	White Black Red	Load cell 1 white wire Load cell 4 black wire A- of HX711
Load cell 3	White Black Red	Load cell 4 white wire Load cell 1 black wire A+ of HX711
Load cell 4	White Black Red	Load cell 3 white wire Load cell 2 black wire E- of HX711

HX711 pin connection:

HX711	Arduino Nano
VCC	5V
GND	GND
DT	D4
SCK	D5

MP3-TF-16P pin connections:

MP3 Module	Arduino Nano
VCC	5V
GND	GND
TX	D8

RX	D7
SPK 1	Speaker +
SPK 2	Speaker -

Note:Add a 1kΩ resistor between RX pin and D7.

4 pin push button connection:

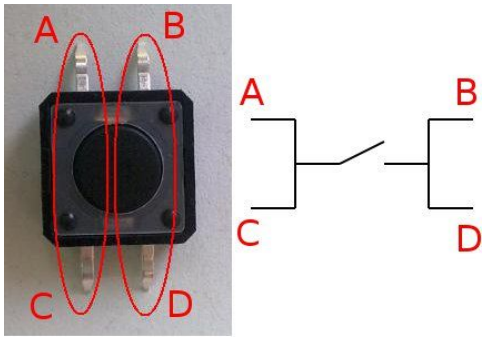

Button	Arduino Nano
Terminal A/C	D6
Terminal B/D	GND

Step 3: Install the required libraries

Open **Arduino IDE**
Go to **Sketch → Include Library → Manage Libraries**
Install all the below libraries:

1. VL53L0X (Pololu)
2. OneWire
3. DallasTemperature
4. PulseSensor Playground
5. LiquidCrystal I2C (Frank de Brabander)
6. HX711_ADC
7. DFMiniMp3 (Makuna)

Step 4: Upload the Arduino Code

Connect Arduino Nano to PC via the given USB wire.
Open Arduino IDE.
Select:
Board → Arduino Nano
Port → COMx
Upload the integrated project code.

Step 5: Testing and Operating the System

Position the Distance Sensor
Mount the distance sensor at a fixed height of 206 cm from the ground.
If the sensor is installed at a different height, update the value in the code accordingly:

```
float heightVal = 206 - distanceCM;
```

1. When the Arduino Nano is powered the LCD displays a message “System starting” followed by a message “Measuring height. Stand still”.
2. Height Measurement
   Stand straight under the sensor and wait while the system measures the height.
   Once the height value is displayed on the LCD, press the mode button to proceed to the next stage.
3. Weight Measurement
   Stand still on the measuring platform connected to the load cell.
   The system will measure your weight and display it on the LCD.
   After the weight is displayed, press the button to move to the next mode.
4. Temperature Measurement
   Hold the temperature probe properly to allow the sensor to measure your body temperature.
   Once the temperature reading appears on the LCD, press the button to continue to the next step.
5. Pulse Rate Measurement
   Place your finger gently on the pulse sensor. Avoid pressing too tightly; ensure the finger rests lightly on the sensor surface.
   The system will measure your pulse rate and display it on the LCD.
6. BMI Calculation and Feedback
   After the pulse measurement is completed, the system will automatically calculate your Body Mass Index (BMI) using the recorded height and weight values.
   Within a few seconds:
   - The BMI value and BMI category will be displayed on the LCD.
   - The audio module will provide voice feedback indicating the BMI category (e.g., Normal, Underweight, or Overweight).

Step 6: Sensor Calibration

If the weight measurement is inaccurate, the sensor needs to be calibrated.

Load Cell Calibration steps

1. Upload HX711 calibration code.

   You can use the calibration code from the example sketches under the HX71_ADC library. The code is also added in the folder as a file named ‘calibration’.

2. Change the calibrated value in the final integrated code:

   ```
   float calibrationValue = 21.15;
   ```

3. And upload it again and try measuring.

Step 6: BMI calculation

Formula :

$$BMI = \frac{Weight(kg)}{Height(m)^2}$$

Step 7: Safety Considerations

- Use stable platform for load cell
- Ensure proper wiring
- Avoid moisture near electronics